Hour meters: The best solution for accurately measuring operating times

MAINTENANCE-FREE TECHNOLOGY, WIDE ASSORTMENT

taxxo product line

The AC hour meters of the taxxo product family are suitable for assembly, installation or DIN rail mounting and are available with different voltage versions. The devices operate mains synchronised within an ambient temperature of -20° C to + 55° C.

These robust devices of the taxxo family comply with the security guidelines of protection class II and IP20 protection - even IP54 protection with seal - and are characterised by a long-life and maintenance-free technology.

The meters of the taxxo product family can capture up to 99,999.99 working hours, for example, suitable for machinery or pumps working tjme control, and thus guarantee an effective runtime measurement of vehicles or machinery of any kind.

The hour meters of the taxxo product line are used to record operating times of machinery and equipment which are used with alternating current.

Hour meters

Hour meters – Selection guide 20

Surface mounting hour meters 22

taxxo 100 22

Built-in mounting hour meters 24

taxxo 112 24

taxxo 612 26

taxxo 712 28

DIN rail mounting hour meters 30

taxxo 403 30

GRÄSSLIN

Hour meter – Selection guide

	taxxo 100	taxxo 112
Mounting	Surface mounting	Built-in mounting
Electric connection	Screw terminal with wire protection max. 2.5 mm^2 Socket	Flat plug DIN 6.3
Supply voltage	AC 18-26 V ± 10 % 50 Hz AC 110-120 V ± 10 % 50 Hz AC 220-240 V ± 10 % 50 Hz AC 330-380 V ± 10 % 50 Hz	AC 18-26 V ± 10 % 50 Hz AC 110-120 V ± 10 % 50 Hz AC 110-127 V ± 10 % 60 Hz AC 220-240 V ± 10 % 50 Hz
Replacement part / accessory	Base Surface mount housing	Ratchet clamp Cover 55 x 55 Cover 72 x 72 Sealing IP54 for cover 72 x 72
Protection type	IP20	IP20 IP54 with sealing
Page	**22**	**24**

taxxo 612	taxxo 712	taxxo 403
Built-in mounting	Built-in mounting	DIN rail mounting
Flat plug DIN 6.3	Flat plug DIN 6.3	Screw terminal with wire protection max. 2.5 mm^2 undetachable screw terminals
AC 18-26 V ± 10 % 50 Hz AC 220-240 V ± 10 % 50 Hz AC 330-380 V ± 10 % 50 Hz	AC 18-26 V ± 10 % 50 Hz AC 110-120 V ± 10 % 50 Hz AC 110-127 V ± 10 % 60 Hz AC 220-240 V ± 10 % 50 Hz	AC 18-26 V ± 10 % 50 Hz AC 36-48 V ± 10 % 50 Hz AC 110-120 V ± 10 % 50 Hz AC 110-127 V ± 10 % 60 Hz AC 220-240 V ± 10 % 50 Hz AC 330-380 V ± 10 % 50 Hz
Sealing IP50 Spring clip	Sealing IP50 Ratchet clamp	–
IP20 IP50 with sealing	IP20 IP50 with sealing	IP20
26	**28**	**30**

GRÄSSLIN

Hour meter surface mounting – taxxo 100

PRODUCT DESCRIPTION

The taxxo 100 hour meter with AC intended for surface mounting is available in different voltage variants.
The device is equipped with a plug base with screw terminals and operates mains synchronised within an ambient temperature of -20 °C ... + 55 °C. The meter can monitor up to 99,999.99 hours of operation. The product complies with the safety guidelines of protection class II and protection type IP20. taxxo is characterised by long-life and maintenance-free technology with robust and reliable design.

- Surface mounting for easy and quick installation

APPLICATION AREAS

- Machinery working time control
- Pumps working time control
- Effective runtime measurement of vehicles and machines

DIMENSION DRAWINGS

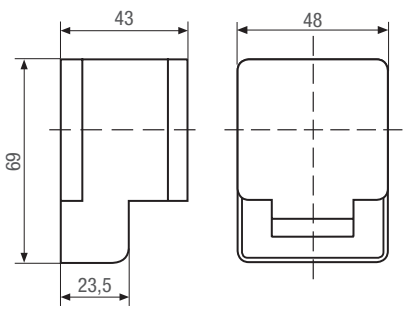

CIRCUIT DIAGRAM

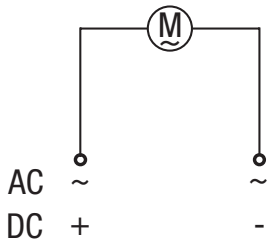

TECHNICAL DATA

Electrical Data	
Power consumption	1 VA
Accuracy	Mains synchronised
Electric connection	
Device	Screw terminal with wire protection max. 2.5 mm^2 Socket
Display and format	
Meter display	Analogue (7 digits) Hours
Operating conditions	
Temperature (operation)	-20° C ... +55° C
General data	
Mounting	Construction Terminal cover
Standard compliance	
Protection type	IP20
Protection class	II, according to corresponding mounting

PRODUCT VARIANTS

Item no. / EAN code	**05.15.1001.1 / 4010940001339**
Supply voltage	AC 220-240 V ± 10 % 50 Hz
Approval mark	CE, VDE, CSA

Item no. / EAN code	**05.15.1010.1 / 4010940001377 ***
Supply voltage	AC 18-26 V ± 10 % 50 Hz
Approval mark	CE, VDE, CSA

Item no. / EAN code	**05.15.1019.1 / 4010940001407**
Supply voltage	AC 110-120 V ± 10 % 50 Hz
Approval mark	CE, VDE, CSA

Item no. / EAN code	**05.15.1089.1 / 4010940001506**
Supply voltage	AC 330-380 V ± 10 % 50 Hz
Approval mark	CE, VDE, CSA

* phase out

SCOPE OF DELIVERY

- **Base ❶**
  Item number: 15.92.0021.4
  EAN Code: 4010940002862
- **Mounting housing ❷**
  Item number: 50.12.0001.4
  EAN Code: 4010940002879

REPLACEMENT PART / ACCESSORY

- **Base ❶**
  Item number: 15.92.0021.4
  EAN Code: 4010940002862
- **Mounting housing ❷**
  Item number: 50.12.0001.4
  EAN Code: 4010940002879

GRÄSSLIN

Hour meters built-in mounting – taxxo 112

PRODUCT DESCRIPTION

The taxxo 112 hour meters with AC intended for built-in mounting is available in different voltage variants. The device is equipped with screw terminals and operates mains synchronised within an ambient temperature of -20 °C ... + 55 °C. The meter can monitor up to 99,999.99 hours of operation. The product complies with the safety guidelines of protection class II and protection type IP20 and even protection type IP54 by using a baffle with seal. taxxo is characterised by long-life and maintenance-free technology with robust and reliable design.

APPLICATION AREAS

- Machinery working time control
- Pumps working time control
- Effective runtime measurement of vehicles and machines

DIMENSION DRAWINGS

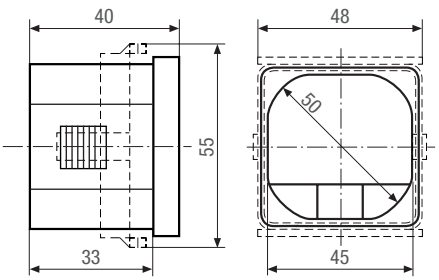

CIRCUIT DIAGRAM

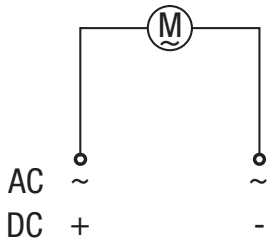

TECHNICAL DATA

Electrical Data	
Power consumption	1 VA
Accuracy	Mains synchronised
Electric connection	
Device	Flat plug DIN 6.3
Display and format	
Meter display	Analogue (7 digits) Hours
Operating conditions	
Temperature (operation)	-20° C ... +55° C
General data	
Mounting	Built-in
Standard compliance	
Protection type	IP20 IP54 with sealing
Protection class	II, according to corresponding mounting

SCOPE OF DELIVERY

- **Catch frame ❶**
  Item number: 15.27.0011.4
  EAN Code: 4010940002886

REPLACEMENT PART / ACCESSORY

- **Catch frame ❶**
  Item number: 15.27.0011.4
  EAN Code: 4010940002886
- **Baffle 55 x 55 ❷**
  Item number: 05.15.0065.6
  EAN Code: 4010940008802
- **Baffle 72 x 72 ❷**
  Item number: 16.26.0006.4
  EAN Code: 4010940008819
- **Sealing IP54 for baffle 72 x 72 ❷**
  Item number: 11.24.0008.8
  EAN Code: 4010940011253

PRODUCT VARIANTS

Item no. / EAN code	**05.15.1016.1 / 4010940002275**
Supply voltage	AC 18-26 V ± 10 % 50 Hz
Approval mark	CE, VDE, CSA, UL

Item no. / EAN code	**05.15.1031.1* / 4010940002299***
Supply voltage	AC 110-127 V ± 10 % 60 Hz
Approval mark	CE, CSA, UL

Item no. / EAN code	**05.15.1038.1 / 4010940002268**
Supply voltage	AC 220-240 V ± 10 % 50 Hz
Approval mark	CE, VDE, CSA, UL

Item no. / EAN code	**05.15.1118.1 / 4010940002282**
Supply voltage	AC 110-120 V ± 10 % 50 Hz
Approval mark	CE, VDE, CSA, UL

* These product variants are only produced by order

GRÄSSLIN

Hour meters built-in mounting – taxxo 612

PRODUCT DESCRIPTION

The taxxo 612 hour meter with AC intended for built-in mounting is available in different voltage variants.
The device operates network synchronously within an ambient temperature of -20 °C ... + 55 °C. The meter can monitor up to 99,999.99 hours of operation. The product complies with the safety guidelines of protection class II and protection type IP20 and even protection type IP50 by using a seal. taxxo is characterised by long-life and maintenance-free technology with robust and reliable design.

APPLICATION AREAS

- Machinery working time control
- Pumps working time control
- Effective runtime measurement of vehicles and machines

DIMENSION DRAWINGS

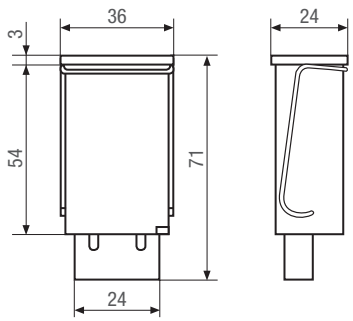

CIRCUIT DIAGRAM

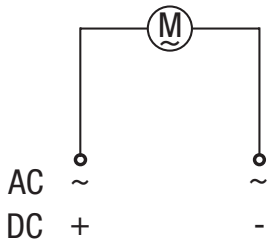

TECHNICAL DATA

Electrical Data	
Power consumption	1 VA
Accuracy	Mains synchronised
Electric connection	
Device	Flat plug DIN 6.3
Display and format	
Meter display	Analogue (7 digits) Hours
Operating conditions	
Temperature (operation)	-20° C ... +55° C
General data	
Mounting	Built-in
Standard compliance	
Protection type	IP20 IP50 with sealing
Protection class	II, according to corresponding mounting

PRODUCT VARIANTS

Item no. / EAN code	**05.20.0006.1 / 4010940001599**
Supply voltage	AC 220-240 V ± 10 % 50 Hz
Item no. / EAN code	**05.20.0016.1 / 4010940001667**
Supply voltage	AC 18-26 V ± 10 % 50 Hz
Item no. / EAN code	**05.20.0033.1 / 4010940001742**
Supply voltage	AC 330-380 V ± 10 % 50 Hz

SCOPE OF DELIVERY

- **Spring clip ❶**
  Item number: 05.20.0026.6
  EAN Code: 4010940002961

REPLACEMENT PART / ACCESSORY

- **Spring clip ❶**
  Item number: 05.20.0026.6
  EAN Code: 4010940002961
- **Seal IP50 ❷**
  Item number: 11.24.0007.8
  EAN Code: 4010940002978

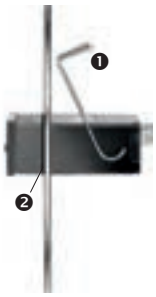

GRÄSSLIN

Hour meters built-in mounting – taxxo 712

PRODUCT DESCRIPTION

The taxxo 712 hour meter with AC intended for built-in mounting is available in different voltage variants. The device operates mains synchronised within an ambient temperature of -20 °C ... + 55 °C. The meter can monitor up to 99,999.99 hours of operation. The product complies with the safety guidelines of protection class II and protection type IP20 and even protection type IP50 by using a seal. taxxo is characterised by long-life and maintenance-free technology with robust and reliable design.

APPLICATION AREAS

- Machinery working time control
- Pumps working time control
- Effective runtime measurement of vehicles and machines

DIMENSION DRAWINGS

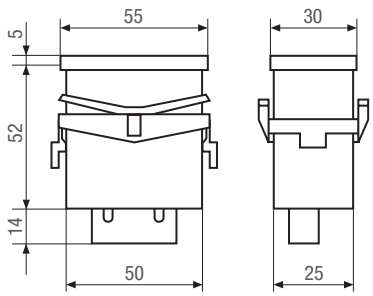

CIRCUIT DIAGRAM

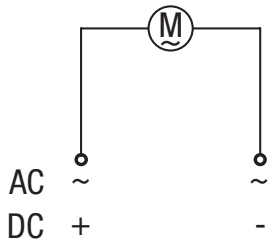

TECHNICAL DATA

Electrical Data	
Power consumption	1 VA
Accuracy	Mains synchronised
Electric connection	
Device	Flat plug DIN 6.3
Display and format	
Meter display	Analogue (7 digits) Hours
Operating conditions	
Temperature (operation)	-20° C ... +55° C
General data	
Mounting	Built-in
Standard compliance	
Protection type	IP20 IP50 with sealing
Protection class	II, according to corresponding mounting

PRODUCT VARIANTS

Item no. / EAN code	**05.20.0004.1 / 4010940001582**
Supply voltage	AC 220-240 V ± 10 % 50 Hz
Approval mark	CE, VDE, CSA, UL

Item no. / EAN code	**05.20.0008.1* / 4010940001629***
Supply voltage	AC 110-127 V ± 10 % 60 Hz
Approval mark	CE, CSA, UL

Item no. / EAN code	**05.20.0018.1 / 4010940001681**
Supply voltage	AC 18-26 V ± 10 % 50 Hz
Approval mark	CE, VDE, CSA, UL

Item no. / EAN code	**05.20.0029.1 / 4010940001728**
Supply voltage	AC 110-120 V ± 10 % 50 Hz
Approval mark	CE, VDE, CSA, UL

* These product variants are only produced by order

SCOPE OF DELIVERY

- **Catch frame ❷**
  Item number: 14.27.0002.4
  EAN Code: 4010940002985

REPLACEMENT PART / ACCESSORY

- **Seal IP50 ❶**
  Item number: 14.24.0001.5
  EAN Code: 4010940002992
- **Catch frame ❷**
  Item number: 14.27.0002.4
  EAN Code: 4010940002985

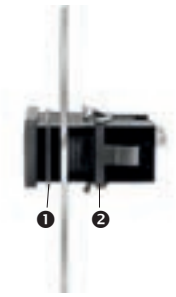

GRÄSSLIN

Hour meter DIN rail mounting – taxxo 403

PRODUCT DESCRIPTION

The taxxo 403 hour meter with AC intended for DIN rail mounting is available in different voltage variants. The device is equipped with undetachable screw terminals and operates mains synchronised within an ambient temperature of -20 °C ... + 55 °C. The meter can monitor up to 99,999.99 hours of operation. The product complies with the safety guidelines of protection class II and protection type IP20. taxxo is characterised by long-life and maintenance-free technology with robust and reliable design.

- Easy and quick installation

APPLICATION AREAS

- Machinery working time control
- Pumps working time control
- Effective runtime measurement of vehicles and machinery

DIMENSION DRAWINGS

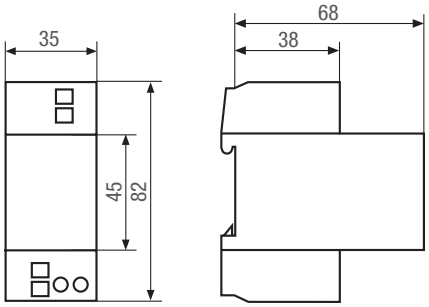

CIRCUIT DIAGRAM

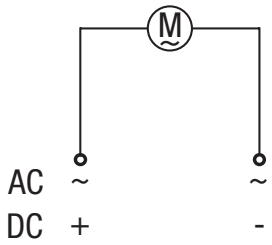

TECHNICAL DATA

Electrical Data	
Power consumption	1 VA
Accuracy	Mains synchronised
Electric connection	
Device	Screw terminal with wire protection max. 2.5 mm^2 Undetachable screw
Display and format	
Meter display	Analogue (7 digits) Hours
Operating conditions	
Temperature (operation)	-20° C ... +55° C
General data	
Weight	90 g
Mounting	DIN rail
Standard compliance	
Protection type	IP20
Protection class	II, according to corresponding mounting

PRODUCT VARIANTS

Item no. / EAN code	**05.21.0002.1 / 4010940001780**
Supply voltage	AC 110-120 V ± 10 % 50 Hz
Approval mark	CE, VDE
Item no. / EAN code	**05.21.0003.1* / 4010940001797***
Supply voltage	AC 36-48 V ± 10 % 50 Hz
Approval mark	CE, VDE
Item no. / EAN code	**05.21.0004.1* / 4010940001803***
Supply voltage	AC 18-26 V ± 10 % 50 Hz
Approval mark	CE, VDE
Item no. / EAN code	**05.21.0009.1* / 4010940001810***
Supply voltage	AC 110-127 V ± 10 % 60 Hz
Approval mark	CE
Item no. / EAN code	**05.21.0001.1 / 4010940001773**
Supply voltage	AC 220-240 V ± 10 % 50 Hz
Approval mark	CE, VDE
Item no. / EAN code	**05.21.0006.1 / 4010940007959**
Supply voltage	AC 330-380 V ± 10 % 50 Hz
Approval mark	CE, VDE

* These product variants are only produced by order

GRÄSSLIN Services

Technology in plain text

You can obtain additional information about our products in the area of “Technology in plain text” at:
http://www.graesslin.de/qrc/catalog/glossary/1/de/

Tender specifications

You can find our current tender specifications as a free download here.
You can thus quickly and easily use the texts in your contract specifications:
http://www.graesslin.de/qrc/catalog/tendertext/1/de/

Discontinued and replacement types

You can find an overview of our discontinued and replacement types here:
http://www.graesslin.de/qrc/catalog/followuptypes/1/de/

Legal notice

Publisher

Grässlin GmbH
Bundesstr. 36
78112 St. Georgen
Germany

Phone: +49 (0) 7724 / 933-0
Fax: +49 (0) 7724 / 933-240
Email: info@graesslin.de

Visit us online:
www.graesslin.de

Layout
team:orange GmbH, web and advertising agency
www.teamorange.de

Printing
C. Maurer GmbH & Co. KG

Edition
Product catalogue meters 2016 © Copyright by Grässlin GmbH
Reprint and extracts require written permission.
Technical changes and errors reserved.

GRÄSSLIN
by INTERMATIC

Grässlin GmbH
Bundesstraße 36
78112 St. Georgen
Germany

+49 (0) 7724 / 933-0
+49 (0) 7724 / 933-240

www.graesslin.de
info@graesslin.de

82.01.1406.7
teamorange.de